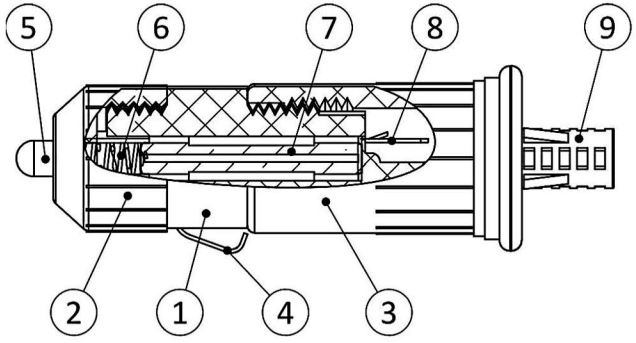

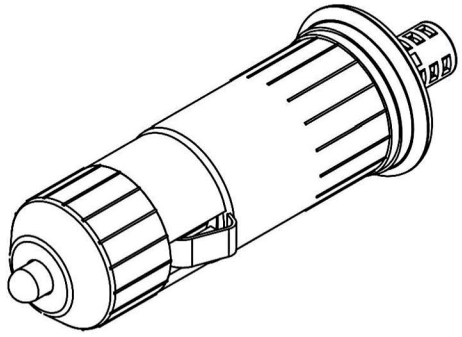

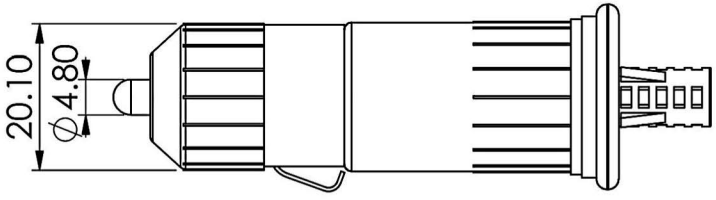

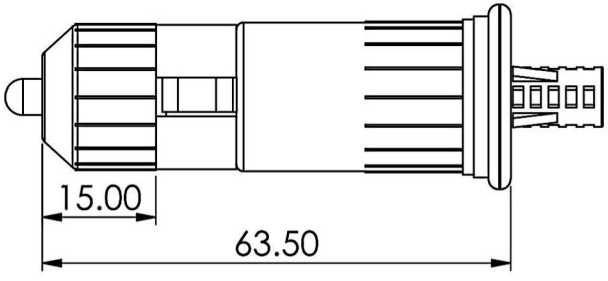

NO.	Part Name	Material	Note
1.	Casing(A)	Bakelite	
2.	Cap	Bakelite	
3.	Base	Bakelite	
4.	Terminal(-)	Phosphor Bronze	Nickel Plated
5.	Tip	Brass	Nickel Plated
6.	Spring	SWG	Zinc Plated
7.	Fuse	Glass Tube	6x30L/5A/**3A**
8.	Terminal(+)	Brass	Nickel Plated
9.	SR	PVC	

1 Operating Temperature: -40 °C to 85 °C

Modify	Date	Revision		Approval	No.
Ring	2018.04.17	Added operating temperature.			1
Size	0.5-6	>6-30	>30-120	>120-400	
Tol	+/-0.05	+/-0.1	+/-0.15	+/-0.2	

Item#	CP-8521/UG								0
Title	Auto Plug								m/m
Mat'l									1:1.5
Auth		CHK	Derek	DWG	Ring	Date	2018.04.17	Proj.	3rd

ULTIMAX® THE ULTIMATE COMPONENTS